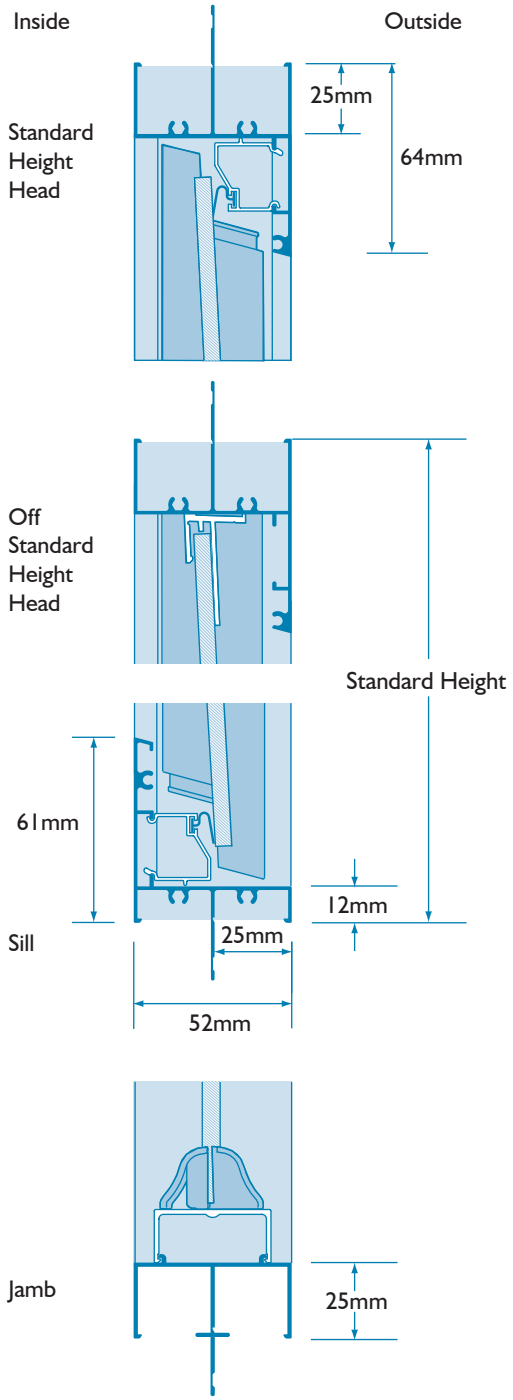
Inside
Outside
Standard Height Head
25mm
64mm
Off Standard Height Head
Standard Height
61mm
12mm
Sill
25mm
52mm
Jamb
25mm